QUAKER WINDOW PRODUCTS

C270 MULTISLIDE DOOR (WZ3)(IMPACT)

GENERAL NOTES:

1. THE PRODUCT SHOWN HEREIN IS DESIGNED AND MANUFACTURED TO COMPLY WITH THE CURRENT EDITION OF THE FLORIDA BUILDING CODE (FBC), **EXCLUDING** HVHZ AND HAS BEEN EVALUATED ACCORDING TO THE FOLLOWING:
   - AAMA/WDMA/CSA 101/I.S.2/A440-22
   - ASTM E1886-19
   - ASTM E1996-20
2. ADEQUACY OF THE EXISTING STRUCTURAL CONCRETE/MASONRY, 2X FRAMING, AND METAL FRAMING AS A MAIN WIND FORCE RESISTING SYSTEM CAPABLE OF WITHSTANDING AND TRANSFERRING APPLIED PRODUCT LOADS TO THE FOUNDATION IS THE RESPONSIBILITY OF THE ENGINEER OR ARCHITECT OF RECORD FOR THE PROJECT OF INSTALLATION.
3. 1X AND 2X BUCKS (WHEN USED) SHALL BE DESIGNED AND ANCHORED TO PROPERLY TRANSFER ALL LOADS TO THE STRUCTURE. BUCK DESIGN AND INSTALLATION IS THE RESPONSIBILITY OF THE ENGINEER OR ARCHITECT OF RECORD FOR THE PROJECT OF INSTALLATION.
4. INSTALL INDIVIDUAL INSTALLATION ANCHORS WITHIN A TOLERANCE OF ±1/4 INCH OF THE DEPICTED LOCATION IN THE ANCHOR LAYOUT DETAIL (I.E., WITHOUT CONSIDERATION OF TOLERANCES). TOLERANCES ARE NOT CUMULATIVE FROM ONE INSTALLATION ANCHOR TO THE NEXT.
5. THE INSTALLATION DETAILS DESCRIBED HEREIN ARE GENERIC AND MAY NOT REFLECT ACTUAL CONDITIONS FOR A SPECIFIC SITE. IF SITE CONDITIONS CAUSE INSTALLATION TO DEVIATE FROM THE REQUIREMENTS DETAILED HEREIN, A LICENSED ENGINEER OR ARCHITECT SHALL PREPARE SITE SPECIFIC DOCUMENTS FOR USE WITH THIS DOCUMENT.
6. APPROVED IMPACT PROTECTIVE SYSTEM **IS NOT REQUIRED** ON THIS PRODUCT IN AREAS REQUIRING IMPACT RESISTANCE IN WIND ZONE 3 OR LESS.
7. APPROVED IMPACT PROTECTIVE SYSTEM **IS REQUIRED** ON THIS PRODUCT IN AREAS REQUIRING IMPACT RESISTANCE IN WIND ZONE 4.
8. DOOR FRAME MATERIAL: ALUMINUM 6063-T6
9. GLASS MEETS THE REQUIREMENTS OF ASTM E1300 GLASS CHARTS. SEE SHEET 1 FOR GLAZING DETAIL.

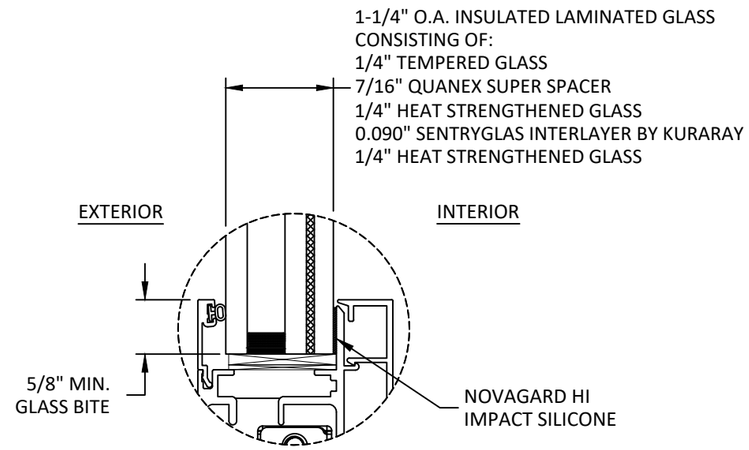

GLAZING DETAIL

GLAZING NOTES:
1. GLASS TYPE COMPLIES WITH ASTM E1300 REQUIREMENTS. PER THE FBC TEMPER AND SAFETY GLAZING REQUIREMENTS SHALL BE REVIEWED ON A SITE SPECIFIC BASIS.
2. SETTING BLOCK DUROMETER HARDNESS OF 70-90 (SHORE A) AS REFERENCED IN FBC CHAPTER 24.
3. SETTING BLOCKS TO BE LOCATED AT 1/4 SPAN LENGTH FOR GLASS WIDER THAN 36" AS PER FBC CHAPTER 24.
4. D.L.O. AND DESIGN PRESSURES MAY NOT EXCEED MAX VALUES SHOWN HEREIN.

TABLE OF CONTENTS

SHEET	SHEET DESCRIPTION
1	GENERAL NOTES AND GLAZING DETAIL
2	ELEVATION
3	ANCHOR LAYOUT
4	VERTICAL SECTION
5	HORIZONTAL SECTIONS
6	ANCHOR DETAILS
7	INSTALLATION NOTES

DESIGN PRESSURE RATING (PSF)

WIDTH (IN.)	HEIGHT (IN.)	DESIGN PRESSURE	MISSILE IMPACT RATING
180	120	+/- 50 PSF	LARGE & SMALL MISSILE IMPACT

QUAKER COMMERCIAL
PO BOX 128
504 HIGHWAY 63 SOUTH
FREEBURG, MO 65035
PH: (573) 744-5211 FX: (573) 744-5822

TITLE: *C270 MULTISLIDE DOOR (WZ3)(IMPACT)*
GENERAL NOTES & GLAZING DETAIL

PREPARED BY:
BUILDING DROPS, INC.
1900 NE MIAMI COURT, STE. 2-15
MIAMI, FL 33132
PH: (954)399-8478
FAX: (954)744.4738
WEB: www.buildingdrops.com

REMARKS	BY	DATE

THE INSTALLATION DETAILS DESCRIBED HEREIN ARE GENERIC AND MAY NOT REFLECT ACTUAL CONDITIONS FOR A SPECIFIC SITE. IF SITE CONDITIONS CAUSE INSTALLATION TO DEVIATE FROM THE REQUIREMENTS DETAILED HEREIN, A LICENSED ENGINEER OR ARCHITECT SHALL PREPARE SITE SPECIFIC DOCUMENTS FOR USE WITH THIS DOCUMENT.

Digitally signed by Hermes F. Norero, P.E.
Reason: I am approving this document
Date: 2026.09.18 16:24:48 -04'00'

HERMES F. NORERO
LICENSE
No. 73778
STATE OF
FLORIDA
PROFESSIONAL ENGINEER

HERMES F. NORERO, P.E.
REGISTERED NO. 73778
BUILDING DROPS, INC
1900 NE MIAMI COURT, STE. 2-15
MIAMI, FL 33132
FBPE CERT. OF AUTHORIZATION No. 29578

FL #: FL48445

DATE: 01.07.2026

DWG. BY: SH | CHK. BY: HFN

SCALE: NTS

DWG. #: QWP041

SHEET: 1 OF 7 | REV. 0

9/18/2026 1:30 PM
c:\users\danielbultrago\building drops, inc\building drops landing - common\projects\quaker window products\fbc-25-1061.3 - c_w200 multislide door\dwgs\qwp041.dwg

9/18/2026 1:30 PM
c:\users\danielbutrago\building drops, inc\building drops landing - common\projects\quaker window products\fbc-25-1061.3 - c_w200 multislide door\dwgs\qwp041.dwg

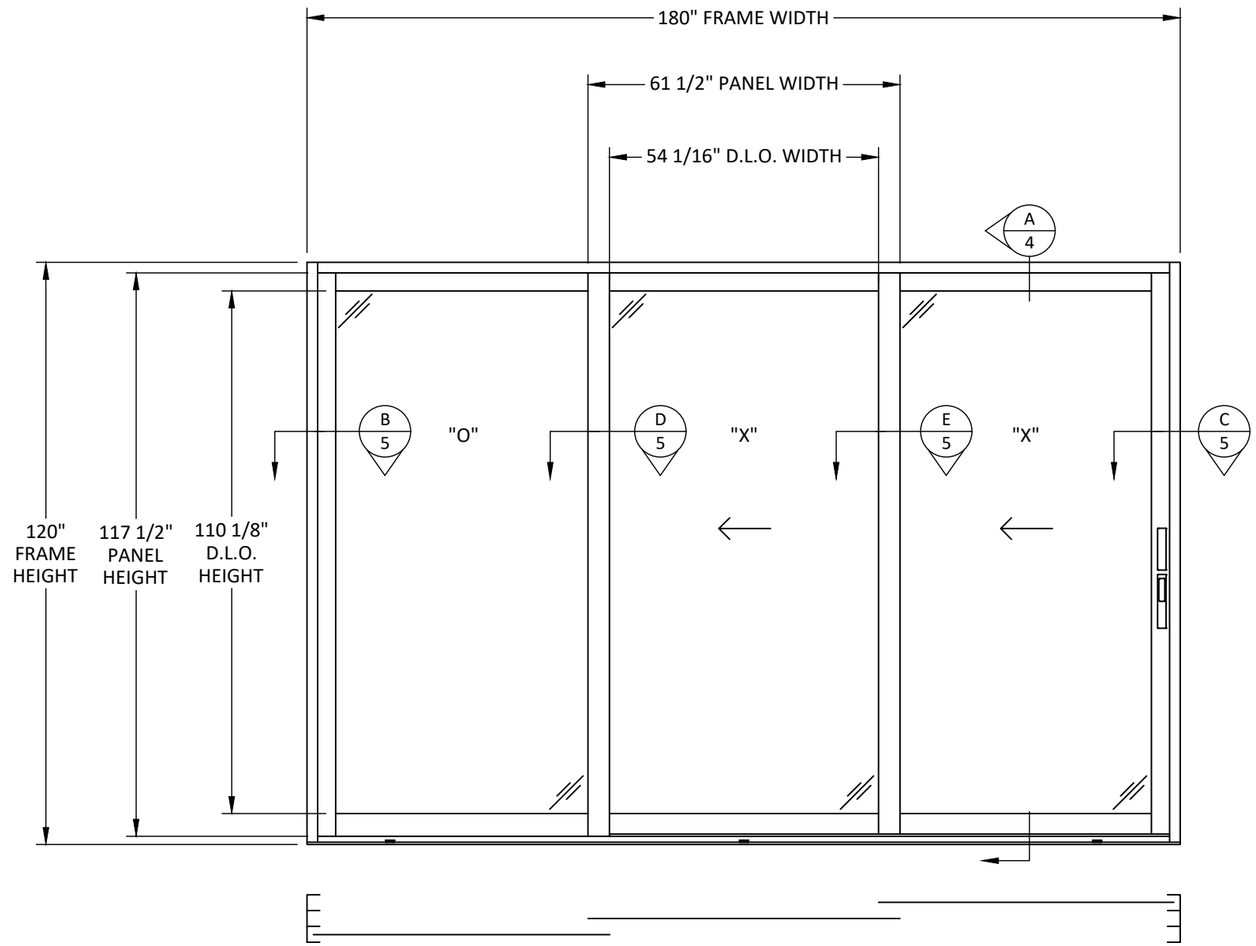

ELEVATION

OXX

QUAKER
COMMERCIAL
PO BOX 128
504 HIGHWAY 63 SOUTH
FREEBURG, MO 65035
PH: (573) 744-5211 FX: (573) 744-5822

TITLE: *C270 MULTISLIDE DOOR (WZ3)(IMPACT)*

ELEVATION

PREPARED BY:
BUILDING DROPS, INC.
1900 NE MIAMI COURT, STE. 2-15
MIAMI, FL 33132
PH: (954)399-8478
FAX: (954)744.4738
WEB: www.buildingdrops.com
BUILDING DROPS

REMARKS	BY	DATE

THE INSTALLATION DETAILS DESCRIBED HEREIN ARE GENERIC AND MAY NOT REFLECT ACTUAL CONDITIONS FOR A SPECIFIC SITE. IF SITE CONDITIONS CAUSE INSTALLATION TO DEVIATE FROM THE REQUIREMENTS DETAILED HEREIN, A LICENSED ENGINEER OR ARCHITECT SHALL PREPARE SITE SPECIFIC DOCUMENTS FOR USE WITH THIS DOCUMENT.

HERMES F. NORERO
LICENSE
No. 73778
STATE OF
FLORIDA
PROFESSIONAL ENGINEER

HERMES F. NORERO P.E.
FLORIDA P.E. No. 73778
BUILDING DROPS, INC
1900 NE MIAMI COURT, STE. 2-15
MIAMI, FL 33132
FBPE CERT. OF AUTHORIZATION No. 29578

FL #: FL48445

DATE: 01.07.2026

DWG. BY: SH

CHK. BY: HFN

SCALE: NTS

DWG. #: QWP041

SHEET: 2 OF 7

REV. 0

9/18/2026 1:30 PM
c:\users\danielbultrago\building drops, inc\building drops landing - common\projects\quaker window products\bc-25-106l.3 - c_w200 multislide door\dwgs\qwp041.dwg

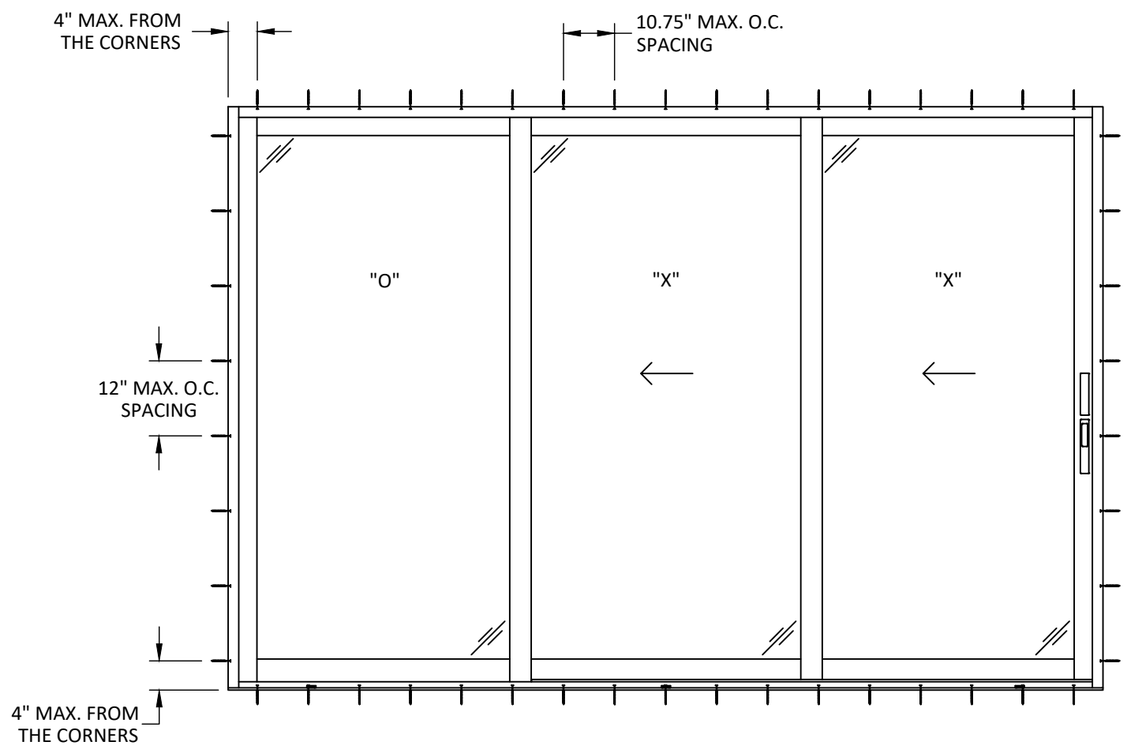

ANCHOR LAYOUT

THROUGH FRAME INSTALLATION

QUAKER
COMMERCIAL
PO BOX 128
504 HIGHWAY 63 SOUTH
FREEBURG, MO 65035
PH: (573) 744-5211 FX: (573) 744-5822

TITLE: *C270 MULTISLIDE DOOR (WZ3)(IMPACT)*

ANCHOR LAYOUT

PREPARED BY:
BUILDING DROPS, INC.
1900 NE MIAMI COURT, STE. 2-15
MIAMI, FL 33132
PH: (954)399-8478
FAX: (954)744.4738
WEB: www.buildingdrops.com
BUILDING DROPS

REMARKS	BY	DATE

THE INSTALLATION DETAILS DESCRIBED HEREIN ARE GENERIC AND MAY NOT REFLECT ACTUAL CONDITIONS FOR A SPECIFIC SITE. IF SITE CONDITIONS CAUSE INSTALLATION TO DEVIATE FROM THE REQUIREMENTS DETAILED HEREIN, A LICENSED ENGINEER OR ARCHITECT SHALL PREPARE SITE SPECIFIC DOCUMENTS FOR USE WITH THIS DOCUMENT.

HERMES F. NORERO
LICENSE
No. 73778
STATE OF
FLORIDA
PROFESSIONAL ENGINEER

HERMES F. NORERO, P.E.
FLORIDA P.E. No. 73778
BUILDING DROPS, INC
1900 NE MIAMI COURT, STE. 2-15
MIAMI, FL 33132
FBPE CERT. OF AUTHORIZATION No. 29578

FL #: FL48445

DATE: 01.07.2026

DWG. BY: SH

CHK. BY: HFN

SCALE: NTS

DWG. #: QWP041

SHEET: 3 OF 7

REV. 0

9/18/2026 1:30 PM
c:\users\danielbuitrago\building drops, inc\building drops landing - common\projects\quaker window products\fbc-25-1061.3 - c_w200 multislide door\dwgs\qwp041.dwg

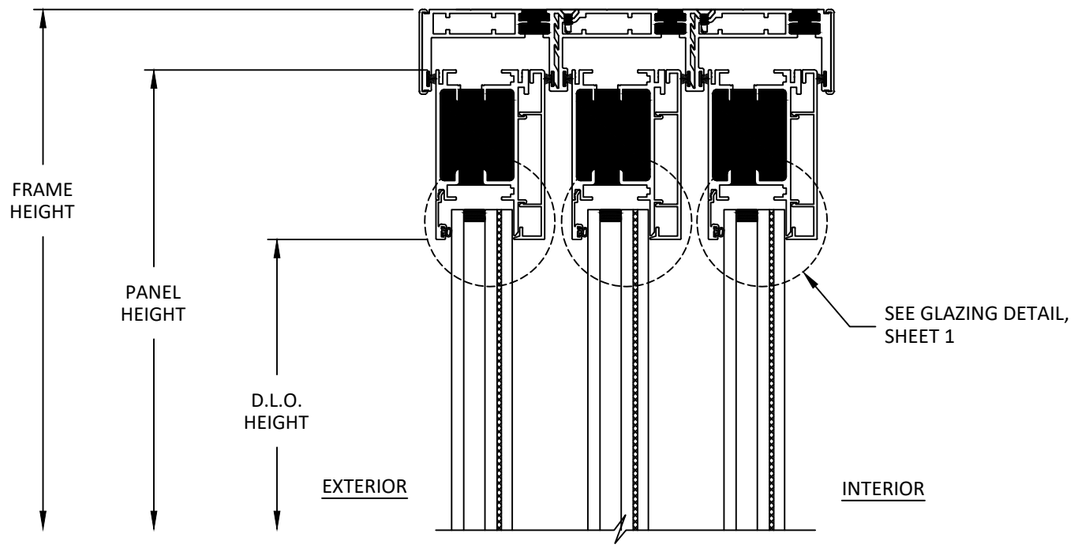

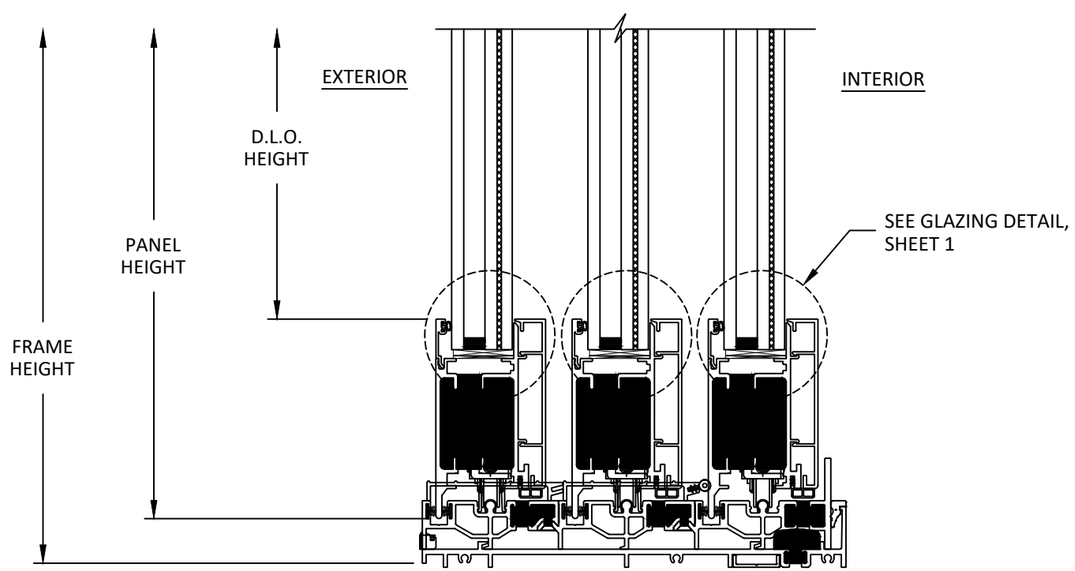

A/4 VERTICAL SECTION

QUAKER COMMERCIAL
PO BOX 128
504 HIGHWAY 63 SOUTH
FREEBURG, MO 65035
PH: (573) 744-5211 FX: (573) 744-5822

TITLE: *C270 MULTISLIDE DOOR (WZ3)(IMPACT)*

VERTICAL SECTION

PREPARED BY:
BUILDING DROPS, INC.
1900 NE MIAMI COURT, STE. 2-15
MIAMI, FL 33132
PH: (954)399-8478
FAX: (954)744.4738
WEB: www.buildingdrops.com
BUILDING DROPS

REMARKS	BY	DATE

THE INSTALLATION DETAILS DESCRIBED HEREIN ARE GENERIC AND MAY NOT REFLECT ACTUAL CONDITIONS FOR A SPECIFIC SITE. IF SITE CONDITIONS CAUSE INSTALLATION TO DEVIATE FROM THE REQUIREMENTS DETAILED HEREIN, A LICENSED ENGINEER OR ARCHITECT SHALL PREPARE SITE SPECIFIC DOCUMENTS FOR USE WITH THIS DOCUMENT.

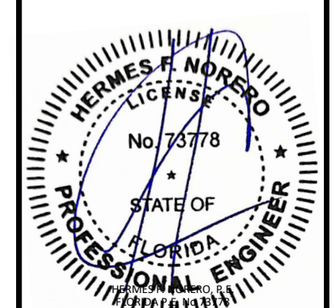

HERMES F. NORERO P.E.
FLORIDA LICENSE No. 73778
BUILDING DROPS, INC
1900 NE MIAMI COURT, STE. 2-15
MIAMI, FL 33132
FBPE CERT. OF AUTHORIZATION No. 29578

FL #: FL48445

DATE: 01.07.2026

DWG. BY: SH | CHK. BY: HFN

SCALE: NTS

DWG. #: QWP041

SHEET: 4 OF 7 | REV. 0

9/18/2026 1:30 PM
c:\users\danielbuitrago\building drops, inc\building drops landing - common\projects\quaker window products\bc-25-106l.3 - c_w200 multislide door\dwgs\qwp041.dwg

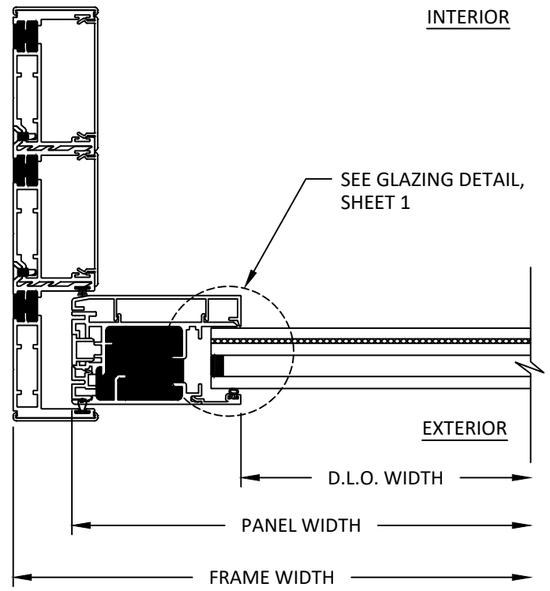

B/5 HORIZONTAL SECTION
FIXED JAMB

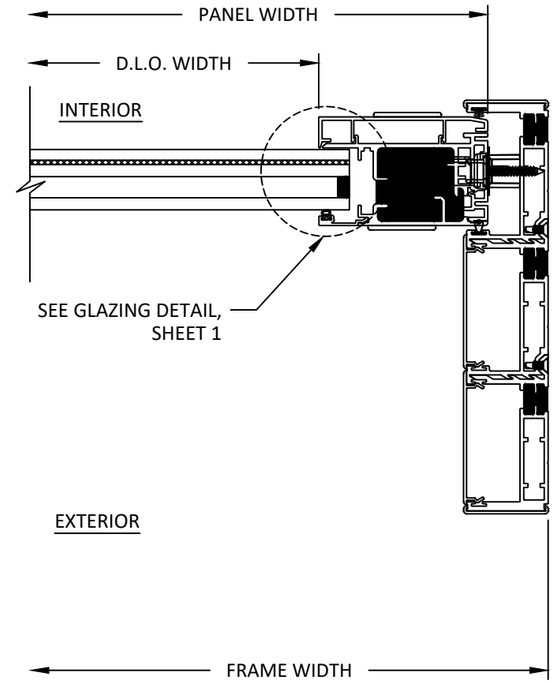

C/5 HORIZONTAL SECTION
LOCK JAMB

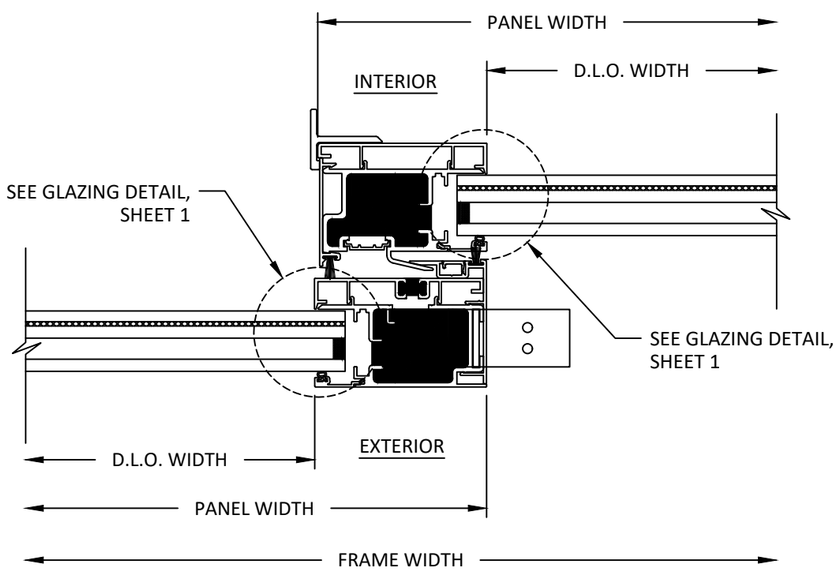

D/5 HORIZONTAL SECTION
FIXED-OPERABLE INTERLOCK

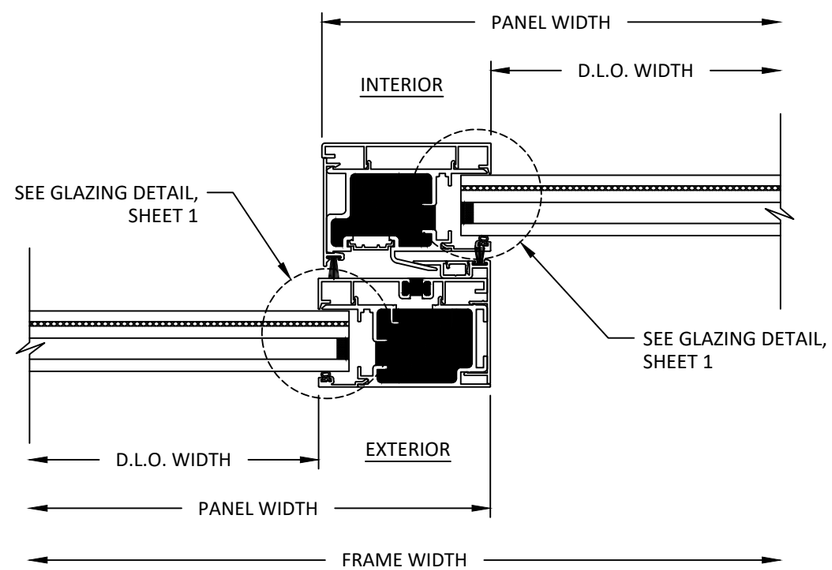

E/5 HORIZONTAL SECTION
OPERABLE-OPERABLE INTERLOCK

QUAKER COMMERCIAL
PO BOX 128
504 HIGHWAY 63 SOUTH
FREEBURG, MO 65035
PH: (573) 744-5211 FX: (573) 744-5822

TITLE: *C270 MULTISLIDE DOOR (WZ3)(IMPACT)*
HORIZONTAL SECTIONS

PREPARED BY:
BUILDING DROPS, INC.
1900 NE MIAMI COURT, STE. 2-15
MIAMI, FL 33132
PH: (954)399-8478
FAX: (954)744.4738
WEB: www.buildingdrops.com

REMARKS	BY	DATE

THE INSTALLATION DETAILS DESCRIBED HEREIN ARE GENERIC AND MAY NOT REFLECT ACTUAL CONDITIONS FOR A SPECIFIC SITE. IF SITE CONDITIONS CAUSE INSTALLATION TO DEVIATE FROM THE REQUIREMENTS DETAILED HEREIN, A LICENSED ENGINEER OR ARCHITECT SHALL PREPARE SITE SPECIFIC DOCUMENTS FOR USE WITH THIS DOCUMENT.

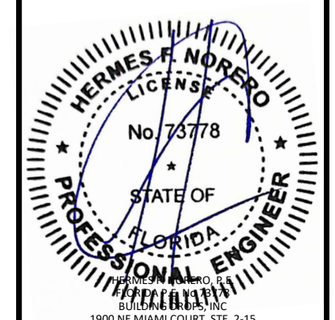

HERMES F. NORERO, P.E.
FLORIDA P.E. No. 73778
BUILDING DROPS, INC
1900 NE MIAMI COURT, STE. 2-15
MIAMI, FL 33132
FBPE CERT. OF AUTHORIZATION No. 29578

FL #: FL48445
DATE: 01.07.2026
DWG. BY: SH
CHK. BY: HFN
SCALE: NTS
DWG. #: QWP041
SHEET: 5
REV. 0
OF 7

9/18/2026 1:30 PM
c:\users\danielbuitrago\building drops, inc\building drops landing - common\projects\quaker window products\fbc-25-1061.3 - c_w200 multislide door\dwgs\qwp041.dwg

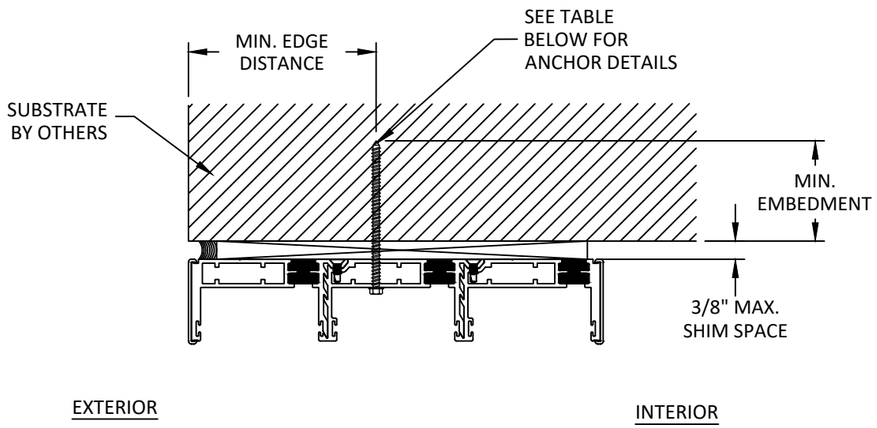

A/6 ANCHOR DETAIL

HEAD
THROUGH FRAME

NOTE: JAMB SIMILAR

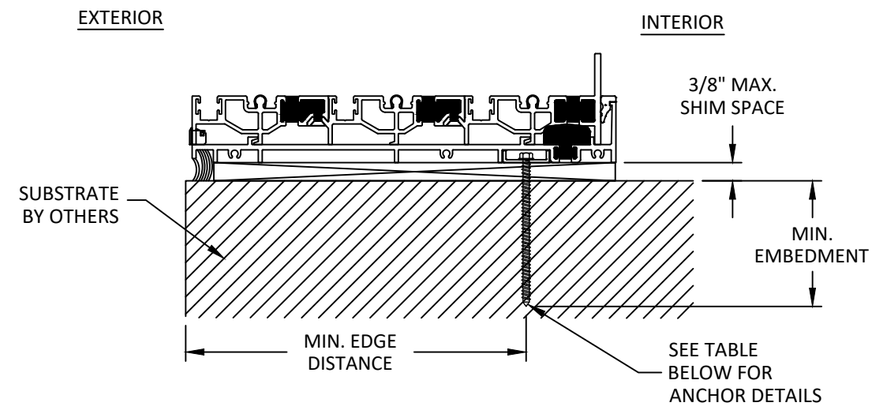

B/6 ANCHOR DETAIL

SILL
THROUGH FRAME

ANCHOR SCHEDULE

METHOD	SUBSTRATE	ANCHOR TYPE	MIN. EMBEDMENT	MIN. EDGE DISTANCE
THROUGH FRAME	WOOD: MIN. SG = 0.55	#12 WOOD SCREW OR #12 GRK R4 SS SCREW*	1.50"	0.75"
	METAL: 18 GAUGE STEEL, MIN. Fy = 33KSI ALUMINUM: 1/8" MIN., 6063-T5	#12 SELF-DRILLING SCREW OR #12 DEWALT BIFLEX SS SCREW*	3 THREADS MIN. PENETRATION BEYOND STRUCTURE	0.50"
	CONCRETE: f'c=3000 PSI MIN.	1/4" ITW TAPCON OR #14 CRETE-FLEX SS SCREW*	1.00"	2.50"
	MASONRY: CMU per ASTM C90 2000 PSI MIN.		1.00"	2.50"

QUAKER COMMERCIAL
PO BOX 128
504 HIGHWAY 63 SOUTH
FREEBURG, MO 65035
PH: (573) 744-5211 FX: (573) 744-5822

TITLE: C270 MULTISLIDE DOOR (WZ3)(IMPACT)

ANCHOR DETAILS

PREPARED BY:
BUILDING DROPS, INC.
1900 NE MIAMI COURT, STE. 2-15
MIAMI, FL 33132
PH: (954)399-8478
FAX: (954)744.4738
WEB: www.buildingdrops.com
BUILDING DROPS

REMARKS	BY	DATE

THE INSTALLATION DETAILS DESCRIBED HEREIN ARE GENERIC AND MAY NOT REFLECT ACTUAL CONDITIONS FOR A SPECIFIC SITE. IF SITE CONDITIONS CAUSE INSTALLATION TO DEVIATE FROM THE REQUIREMENTS DETAILED HEREIN, A LICENSED ENGINEER OR ARCHITECT SHALL PREPARE SITE SPECIFIC DOCUMENTS FOR USE WITH THIS DOCUMENT.

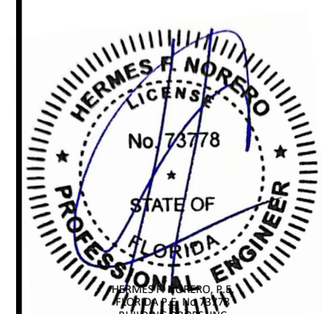

HERMES F. NORERO, P.E.
FLORIDA LICENSE No. 73778
BUILDING DROPS, INC
1900 NE MIAMI COURT, STE. 2-15
MIAMI, FL 33132
FBPE CERT. OF AUTHORIZATION No. 29578

FL #: FL48445

DATE: 01.07.2026

DWG. BY: SH

CHK. BY: HFN

SCALE: NTS

DWG. #: QWP041

SHEET: 6 OF 7

REV. 0

9/18/2026 1:30 PM
c:\users\danielbuitrago\building drops, inc\building drops landing - common\projects\quaker window products\fbc-25-1061.3 - c_w200 multislide door\dwgs\qwp041.dwg

INSTALLATION NOTES:

1. ONE (1) INSTALLATION ANCHOR IS REQUIRED AT EACH ANCHOR LOCATION SHOWN, UNLESS OTHERWISE STATED ON SHEET 3.

2. INSTALL INDIVIDUAL INSTALLATION ANCHORS WITHIN A TOLERANCE OF ±1/4 INCH THE DEPICTED LOCATION & SPACING IN THE ANCHOR LAYOUT DETAILS (I.E., WITHOUT CONSIDERATION OF TOLERANCES). TOLERANCES ARE NOT CUMULATIVE FROM ONE INSTALLATION ANCHOR TO THE NEXT.

3. SHIM AS REQUIRED AT EACH INSTALLATION ANCHOR WITH LOAD BEARING SHIM(S). MAXIMUM ALLOWABLE SHIM STACK TO BE 3/8 INCH. SHIM WHERE SPACE OF 1/16 INCH OR GREATER OCCURS. SHIM(S) SHALL BE CONSTRUCTED OF HIGH DENSITY PLASTIC OR BETTER.

4. MINIMUM EMBEDMENT AND EDGE DISTANCE EXCLUDE WALL FINISHES, INCLUDING BUT NOT LIMITED TO STUCCO, FOAM, BRICK VENEER, AND SIDING.

5. INSTALLATION ANCHORS AND ASSOCIATED HARDWARE MUST BE MADE OF CORROSION RESISTANT MATERIAL OR HAVE A CORROSION RESISTANT COATING.

5.1. FASTENERS USED WITHIN 3,000 FEET OF A SALTWATER COASTLINE AND INSTALLED IN ENCLOSED SPACES SHALL BE GALVANIZED IN ACCORDANCE WITH SECTION 1711.1.1 (E.G., ASTM A153 CLASS D, ASTM A641 CLASS 3S, OR EQUIVALENT CORROSION RESISTANCE).

5.2. *FASTENERS INSTALLED WITHIN 300 FEET OF A SALTWATER COASTLINE IN EXTERIOR-PARTIALLY SHELTERED OR EXTERIOR-OPEN EXPOSED SPACES SHALL BE STAINLESS STEEL PER SECTION 1711.1.1.1 (ASTM A240 TYPE 304, A305, 316, OR 410).

5.3. CONNECTORS AND METAL PLATES USED WITHIN 3,000 FEET OF A SALTWATER COASTLINE AND INSTALLED IN ENCLOSED UNVENTED SPACES SHALL BE STANDARD GALVANIZED IN ACCORDANCE WITH SECTION 1711.1.2 (E.G., ASTM A653 G90, ASTM A123, OR PROTECTIVE COATING PER TPI 1).

5.4. CONNECTORS AND METAL PLATES USED BETWEEN 300 AND 3,000 FEET OF A SALTWATER COASTLINE AND INSTALLED IN ENCLOSED VENTED SPACES, EXTERIOR-PARTIALLY SHELTERED OR EXTERIOR-OPEN EXPOSED SPACES SHALL BE ENHANCED GALVANIZED PER SECTION 1711.1.2.2 (ASTM A653 G185, ASTM A123 AT 2.0 OZ/SF MIN, OR TPI 1 COATING).

5.5. *CONNECTORS AND METAL PLATES USED WITHIN 300 FEET OF A SALTWATER COASTLINE IN EXTERIOR-PARTIALLY SHELTERED OR EXTERIOR-OPEN EXPOSED SPACES SHALL BE STAINLESS STEEL PER SECTION 1711.1.2.1 (ASTM A240 TYPE 316).

5.6. FASTENERS USED WITH CONNECTORS OR METAL PLATES SHALL HAVE A CORROSION-RESISTANT COATING OR COMPOSITION COMPATIBLE WITH THAT OF THE CONNECTOR/PLATE TO PREVENT GALVANIC CORROSION BETWEEN DISSIMILAR MATERIALS (SECTION 1711.1.1.3). EXCEPTION: FASTENERS AND CONNECTORS FULLY EMBEDDED IN CONCRETE OR MORTAR ARE EXEMPT FROM NOTES 6 AND 7 (SECTION 1711.1).

6. FOR MASONRY OR CONCRETE OPENINGS, A 1X WOOD BUCK MAY BE USED (OPTIONAL) AS LONG AS THE MINIMUM EMBEDMENT AND EDGE DISTANCE REQUIREMENTS ARE STILL MET WITHIN THE CORRESPONDING HOST SUBSTRATE. SEE GENERAL NOTE #3 ON SHEET 1 FOR MORE INFORMATION.

7. FOR HOLLOW BLOCK AND GROUT FILLED BLOCK, DO NOT INSTALL INSTALLATION ANCHORS INTO MORTAR JOINTS. EDGE DISTANCE IS MEASURED FROM FREE EDGE OF BLOCK OR EDGE OF MORTAR JOINT INTO FACE SHELL OF BLOCK.

8. INSTALLATION ANCHORS SHALL BE INSTALLED IN ACCORDANCE WITH ANCHOR MANUFACTURER'S INSTALLATION INSTRUCTIONS, AND ANCHORS SHALL NOT BE USED IN SUBSTRATES WITH STRENGTHS LESS THAN THE MINIMUM STRENGTH SPECIFIED BY THE ANCHOR MANUFACTURER.

QUAKER
COMMERCIAL
PO BOX 128
504 HIGHWAY 63 SOUTH
FREEBURG, MO 65035
PH: (573) 744-5211 FX: (573) 744-5822

TITLE: *C270 MULTISLIDE DOOR (WZ3)(IMPACT)*

INSTALLATION NOTES

PREPARED BY:
BUILDING DROPS, INC.
1900 NE MIAMI COURT, STE. 2-15
MIAMI, FL 33132
PH: (954)399-8478
FAX: (954)744.4738
WEB: www.buildingdrops.com
BUILDING DROPS

REMARKS	BY	DATE

THE INSTALLATION DETAILS DESCRIBED HEREIN ARE GENERIC AND MAY NOT REFLECT ACTUAL CONDITIONS FOR A SPECIFIC SITE. IF SITE CONDITIONS CAUSE INSTALLATION TO DEVIATE FROM THE REQUIREMENTS DETAILED HEREIN, A LICENSED ENGINEER OR ARCHITECT SHALL PREPARE SITE SPECIFIC DOCUMENTS FOR USE WITH THIS DOCUMENT.

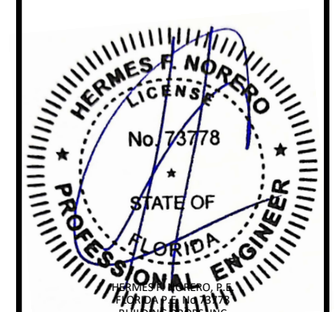

HERMES F. NORERO, P.E.
PRINCIPAL ENGINEER
BUILDING DROPS, INC
1900 NE MIAMI COURT, STE. 2-15
MIAMI, FL 33132
FBPE CERT. OF AUTHORIZATION No. 29578

FL #: FL48445

DATE: 01.07.2026

DWG. BY: SH | CHK. BY: HFN

SCALE: NTS

DWG. #: QWP041

SHEET: 7 OF 7 | REV. 0